DAIKIN

Installation manual

R32 split series

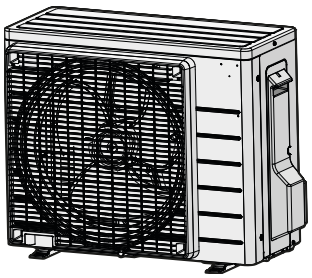

RXP20L2V1B
RXP25L2V1B
RXP35L2V1B

ARXP20L2V1B
ARXP25L2V1B
ARXP35L2V1B

RXF20A2V1B
RXF25A2V1B
RXF35A2V1B

Installation manual
R32 split series

English

CE - DECLARATION-OF-CONFORMITY
CE - KONFORMITÄTSERKLÄRUNG
CE - DECLARATION-DE-CONFORMITE
CE - CONFORMITEITSVERKLARING
CE - DECLARACION-DE-CONFORMIDAD
CE - DICHIARAZIONE-DI-CONFORMITA
CE - ΔΗΛΩΣΗ ΣΥΜΜΟΡΦΩΣΗΣ
CE - DECLARAÇÃO-DE-CONFORMIDADE
CE - ЗАЯВЛЕНИЕ-О-СООТВЕТСТВИИ
CE - OVERENSSTEMMELSESERKLÆRING
CE - FÖRSÄKRAN-OM-ÖVERENSTÄMMELSE
CE - ERKLÆRING OM-SAMSVAR
CE - ILMOITUS-YHDENMUKAISUUDESTA
CE - PROHLÁŠENÍ-O-SHODĚ
CE - IZJAVA-O-USKLAĐENOSTI
CE - MEGFELELŐSÉGI-NYILATKOZAT
CE - DEKLARACJA-ZGODNOŚCI
CE - DECLARAŢIE-DE-CONFORMITATE
CE - IZJAVA O SKLADNOSTI
CE - VASTAVUSDEKLARATSIOON
CE - ДЕКЛАРАЦИЯ-ЗА-СЪОТВЕТСТВИЕ
CE - ATITIKTIES-DEKLARACIJA
CE - ATBILSTĪBAS-DEKLARĀCIJA
CE - VYHLÁSENIE-ZHODY
CE - UYGUNLUK-BEYANI

Daikin Industries Czech Republic s.r.o.

01 (GB) declares under its sole responsibility that the air conditioning models to which this declaration relates:
02 (D) erklärt auf seine alleinige Verantwortung daß die Modelle der Klimageräte für die diese Erklärung bestimmt ist:
03 (F) déclare sous sa seule responsabilité que les appareils d'air conditionné visés par la présente déclaration:
04 (NL) verklaart hierbij op eigen exclusieve verantwoordelijkheid dat de airconditioning units waarop deze verklaring betrekking heeft:
05 (E) declara baja su única responsabilidad que los modelos de aire acondicionado a los cuales hace referencia la declaración:
06 (I) dichiara sotto sua responsabilità che i condizionatori modello a cui è riferita questa dichiarazione:
07 (GR) δηλώνει με αποκλειστική της ευθύνη ότι τα μοντέλα των κλιματιστικών συσκευών στα οποία αναφέρεται η παρούσα δήλωση:
08 (P) declara sob sua exclusiva responsabilidade que os modelos de ar condicionado a que esta declaração se refere:
09 (RUS) заявляет, исключительно под свою ответственность, что модели кондиционеров воздуха, к которым относится настоящее заявление:
10 (DK) erklærer under eneansvar, at klimaanlægmodellerne, som denne deklaration vedrører:
11 (S) deklarerar i egenskap av huvudansvarig, att luftkonditioneringsmodellerna som berörs av denna deklaration innebär att:
12 (N) erklærer et fullstendig ansvar for at de luftkondisjoneringsmodeller som berøres av denne deklarasjon, innebærer at:
13 (FIN) ilmoittaa yksinomaan omalla vastuullaan, että tämän ilmoituksen tarkoittamat ilmastointilaitteiden mallit:
14 (CZ) prohlašuje ve své plné odpovědnosti, že modely klimatizace, k nimž se toto prohlášení vztahuje:
15 (HR) izjavljuje pod isključivo vlastitom odgovornošću da su modeli klima uređaja na koje se ova izjava odnosi:
16 (H) teljes felelőssége tudatában kijelenti, hogy a klímaberendezés modellek, melyekre e nyilatkozat vonatkozik:
17 (PL) deklaruje na własną i wyłączną odpowiedzialność, że modele klimatyzatorów, których dotyczy niniejsza deklaracja:
18 (RO) declară pe proprie răspundere că aparatele de aer condiţionat la care se referă această declaraţie:
19 (SLO) z vso odgovornostjo izjavlja, da so modeli klimatskih naprav, na katere se izjava nanaša:
20 (EST) kinnitab oma täielikul vastutusel, et käesoleva deklaratsiooni alla kuuluvad kliimaseadmete mudelid:
21 (BG) декларира на своя отговорност, че моделите климатична инсталация, за които се отнася тази декларация:
22 (LT) visiška savo atsakomybe skelbia, kad oro kondicionavimo prietaisų modeliai, kuriems yra taikoma ši deklaracija:
23 (LV) ar pilnu atbildību apliecina, ka tālāk uzskaitīto modeļu gaisa kondicionētāji, uz kuriem attiecas šī deklarācija:
24 (SK) vyhlasuje na vlastnú zodpovednosť, že tieto klimatizačné modely, na ktoré sa vzťahuje toto vyhlásenie:
25 (TR) tamamen kendi sorumluluğunda olmak üzere bu bildirinin ilgili olduğu klima modellerinin aşağıdaki gibi olduğunu beyan eder:

RXP20L2V1B, RXP25L2V1B, RXP35L2V1B, ARXP20L2V1B, ARXP25L2V1B, ARXP35L2V1B,

01 are in conformity with the following standard(s) or other normative document(s), provided that these are used in accordance with our instructions:
02 der/den folgenden Norm(en) oder einem anderen Normdokument oder -dokumenten entspricht/entsprechen, unter der Voraussetzung, daß sie gemäß unseren Anweisungen eingesetzt werden:
03 sont conformes à la/aux norme(s) ou autre(s) document(s) normatif(s), pour autant qu'ils soient utilisés conformément à nos instructions:
04 conform de volgende norm(en) of één of meer andere bindende documenten zijn, op voorwaarde dat ze worden gebruikt overeenkomstig onze instructies:
05 están en conformidad con la(s) siguiente(s) norma(s) u otro(s) documento(s) normativo(s), siempre que sean utilizados de acuerdo con nuestras instrucciones:
06 sono conformi al(i) seguente(i) standard(s) o altro(i) documento(i) a carattere normativo, a patto che vengano usati in conformità alle nostre istruzioni:
07 είναι σύμφωνα με το(α) ακόλουθο(α) πρότυπο(α) ή άλλο έγγραφο(α) κανονισμών, υπό την προϋπόθεση ότι χρησιμοποιούνται σύμφωνα με τις οδηγίες μας:
08 estão em conformidade com a(s) seguinte(s) norma(s) ou outro(s) documento(s) normativo(s), desde que estes sejam utilizados de acordo com as nossas instruções:
09 соответствуют следующим стандартам или другим нормативным документам, при условии их использования согласно нашим инструкциям:
10 overholder følgende standard(er) eller andet/andre retningsgivende dokument(er), forudsat at disse anvendes i henhold til vore instrukser:
11 respektive utrustning är utförd i överensstämmelse med och följer följande standard(er) eller andra normgivande dokument, under förutsättning att användning sker i överensstämmelse med våra instruktioner:
12 respektive utstyr er i overensstemmelse med følgende standard(er) eller andre normgivende dokument(er), under forutsetning av at disse brukes i henhold til våre instrukser:
13 vastaavat seuraavien standardien ja muiden ohjeellisten dokumenttien vaatimuksia edellyttäen, että niitä käytetään ohjeidemme mukaisesti:
14 za předpokladu, že jsou využívány v souladu s našimi pokyny, odpovídají následujícím normám nebo normativním dokumentům:
15 u skladu sa slijedećim standardom(ima) ili drugim normativnim dokumentom(ima), uz uvjet da se oni koriste u skladu s našim uputama:
16 megfelelnek az alábbi szabvány(ok)nak vagy egyéb irányadó dokumentum(ok)nak, ha azokat előírás szerint használják:
17 spełniają wymogi następujących norm i innych dokumentów normalizacyjnych, pod warunkiem że używane są zgodnie z naszymi instrukcjami:
18 sunt în conformitate cu următorul (următoarele) standard(e) sau alt(e) document(e) normativ(e), cu condiţia ca acestea să fie utilizate în conformitate cu instrucţiunile noastre:
19 skladni z naslednjimi standardi in drugimi normativi, pod pogojem, da se uporabljajo v skladu z našimi navodili:
20 on vastavuses järgmis(t)e standardi(te)ga või teiste normatiivsete dokumentidega, kui neid kasutatakse vastavalt meie juhenditele:
21 съответстват на следните стандарти или други нормативни документи, при условие, че се използват съгласно нашите инструкции:
22 atitinka žemiau nurodytus standartus ir (arba) kitus norminius dokumentus su sąlyga, kad yra naudojami pagal mūsų nurodymus:
23 tad, ja lietoti atbilstoši ražotāja norādījumiem, atbilst sekojošiem standartiem un citiem normatīviem dokumentiem:
24 sú v zhode s nasledovnou(ými) normou(ami) alebo iným(i) normatívnym(i) dokumentom(ami), za predpokladu, že sa používajú v súlade s naším návodom:
25 ürünün, talimatlarımıza göre kullanılması koşuluyla aşağıdaki standartlar ve norm belirten belgelerle uyumludur:

EN60335-2-40,

01 following the provisions of:
02 gemäß den Vorschriften der:
03 conformément aux stipulations des:
04 overeenkomstig de bepalingen van:
05 siguiendo las disposiciones de:
06 secondo le prescrizioni per:
07 με τήρηση των διατάξεων των:
08 de acordo com o previsto em:
09 в соответствии с положениями:
10 under iagttagelse af bestemmelserne i:
11 enligt villkoren i:
12 gitt i henhold til bestemmelsene i:
13 noudattaen määräyksiä:
14 za dodržení ustanovení předpisu:
15 prema odredbama:
16 követi a(z):
17 zgodnie z postanowieniami Dyrektyw:
18 în urma prevederilor:
19 ob upoštevanju določb:
20 vastavalt nõuetele:
21 спедвайки клаузите на:
22 laikantis nuostatų, pateikiamų:
23 ievērojot prasības, kas noteiktas:
24 održiavajúc ustanovenia:
25 bunun koşullarına uygun olarak:

Low Voltage 2014/35/EU
Electromagnetic Compatibility 2014/30/EU *
Machinery 2006/42/EC **

01 Directives, as amended.
02 Direktiven, gemäß Änderung.
03 Directives, telles que modifiées.
04 Richtlijnen, zoals geamendeerd.
05 Directivas, según lo enmendado.
06 Direttive, come da modifica.
07 Οδηγιών, όπως έχουν τροποποιηθεί.
08 Directivas, conforme alteração em.
09 Директив со всеми поправками.
10 Direktiver, med senere ændringer.
11 Direktiv, med företagna ändringar.
12 Direktiver, med foretatte endringer.
13 Direktiivejä, sellaisina kuin ne ovat muutettuina.
14 v platném znění.
15 Smjernice, kako je izmijenjeno.
16 irányelv(ek) és módosításaik rendelkezéseit.
17 z późniejszymi poprawkami.
18 Directivelor, cu amendamentele respective.
19 Direktive z vsemi spremembami.
20 Direktiivid koos muudatustega.
21 Директиви, с техните изменения.
22 Direktyvose su papildymais.
23 Direktīvās un to papildinājumos.
24 Smernice, v platnom znení.
25 Değiştirilmiş hallerıyle Yönetmelikler.

01 **Note*** as set out in **<A>** and judged positively by **<B>** according to the **Certificate <C>**.
02 **Hinweis*** wie in **<A>** aufgeführt und von **<B>** positiv beurteilt gemäß **Zertifikat <C>**.
03 **Remarque*** tel que défini dans **<A>** et évalué positivement par **<B>** conformément au **Certificat <C>**.
04 **Bemerk*** zoals vermeld in **<A>** en positief beoordeeld door **<B>** overeenkomstig **Certificaat <C>**.
05 **Nota*** como se establece en **<A>** y es valorado positivamente por **<B>** de acuerdo con el **Certificado <C>**.
06 **Nota*** delineato nel **<A>** e giudicato positivamente da **<B>** secondo il **Certificato <C>**.
07 **Σημείωση*** όπως καθορίζεται στο **<A>** και κρίνεται θετικά από το **<B>** σύμφωνα με το **Πιστοποιητικό <C>**.
08 **Nota*** tal como estabelecido em **<A>** e com o parecer positivo de **<B>** de acordo com o **Certificado <C>**.
09 **Примечание*** как указано в **<A>** и в соответствии с положительным решением **<B>** согласно **Свидетельству <C>**.
10 **Bemærk*** som anført i **<A>** og positivt vurderet af **<B>** i henhold til **Certifikat <C>**.
11 **Information*** enligt **<A>** och godkänts av **<B>** enligt **Certifikatet <C>**.
12 **Merk*** som det fremkommer i **<A>** og gjennom positiv bedømmelse av **<B>** ifølge **Sertifikat <C>**.
13 **Huom*** jotka on esitetty asiakirjassa **<A>** ja jotka **<B>** on hyväksynyt **Sertifikaatin <C>** mukaisesti.
14 **Poznámka*** jak bylo uvedeno v **<A>** a pozitivně zjištěno **<B>** v souladu s **osvědčením <C>**.
15 **Napomena*** kako je izloženo u **<A>** i pozitivno ocijenjeno od strane **<B>** prema **Certifikatu <C>**.
16 **Megjegyzés*** a(z) **<A>** alapján, a(z) **<B>** igazolta a megfelelést, a(z) **<C>** **tanúsítvány** szerint.
17 **Uwaga*** zgodnie z dokumentacją **<A>**, pozytywną opinią **<B>** i **Świadectwem <C>**.
18 **Notă*** aşa cum este stabilit în **<A>** şi apreciat pozitiv de **<B>** în conformitate cu **Certificatul <C>**.
19 **Opomba*** kot je določeno v **<A>** in odobreno s strani **<B>** v skladu s **certifikatom <C>**.
20 **Märkus*** nagu on näidatud dokumendis **<A>** ja heaks kiidetud **<B>** järgi vastavalt **sertifikaadile <C>**.
21 **Забележка*** както е изложено в **<A>** и оценено положително от **<B>** съгласно **Сертификата <C>**.
22 **Pastaba*** kaip nustatyta **<A>** ir kaip teigiamai nuspręsta **<B>** pagal **Sertifikatą <C>**.
23 **Piezīmes*** kā norādīts **<A>** un atbilstoši **<B>** pozitīvajam vērtējumam saskaņā ar **sertifikātu <C>**.
24 **Poznámka*** ako bolo uvedené v **<A>** a pozitívne zistené **<B>** v súlade s **osvedčením <C>**.
25 **Not*** **<A>**'da belirtildiği gibi ve **<C>** **Sertifikasına** göre **<B>** tarafından olumlu olarak değerlendirildiği gibi.

<A>	**DAIKIN.TCF.032D2/12-2017**
<B>	**DEKRA (NB0344)**
<C>	**2159619.0551-EMC**

01** DICz*** is authorised to compile the Technical Construction File.
02** DICz*** hat die Berechtigung die Technische Konstruktionsakte zusammenzustellen.
03** DICz*** est autorisé à compiler le Dossier de Construction Technique.
04** DICz*** is bevoegd om het Technisch Constructiedossier samen te stellen.
05** DICz*** está autorizado a compilar el Archivo de Construcción Técnica.
06** DICz*** è autorizzata a redigere il File Tecnico di Costruzione.
07** Η DICz*** είναι εξουσιοδοτημένη να συντάξει τον Τεχνικό φάκελο κατασκευής.
08** A DICz*** está autorizada a compilar a documentação técnica de fabrico.
09** Компания DICz*** уполномочена составить Комплект технической документации.
10** DICz*** er autoriseret til at udarbejde de tekniske konstruktionsdata.
11** DICz*** är bemyndigade att sammanställa den tekniska konstruktionsfilen.
12** DICz*** har tillatelse til å kompilere den Tekniske konstruksjonsfilen.
13** DICz*** on valtuutettu laatimaan Teknisen asiakirjan.
14** Společnost DICz*** má oprávnění ke kompilaci souboru technické konstrukce.
15** DICz*** je ovlašten za izradu Datoteke o tehničkoj konstrukciji.
16** A DICz*** jogosult a műszaki konstrukciós dokumentáció összeállítására.
17** DICz*** ma upoważnienie do zbierania i opracowywania dokumentacji konstrukcyjnej.
18** DICz*** este autorizat să compileze Dosarul tehnic de construcţie.
19** DICz*** je pooblaščen za sestavo datoteke s tehnično mapo.
20** DICz*** on volitatud koostama tehnilist dokumentatsiooni.
21** DICz*** е оторизирана да състави Акта за техническа конструкция.
22** DICz*** yra įgaliota sudaryti šį techninės konstrukcijos failą.
23** DICz*** ir autorizēts sastādīt tehnisko dokumentāciju.
24** Spoločnosť DICz*** je oprávnená vytvoriť súbor technickej konštrukcie.
25** DICz*** Teknik Yapı Dosyasını derlemeye yetkilidir.

***DICz = Daikin Industries Czech Republic s.r.o.

3P511700-4A

DAIKIN

Tetsuya Baba
Managing Director
Pilsen, 1st of December 2017

DAIKIN INDUSTRIES CZECH REPUBLIC s.r.o.
U Nové Hospody 1/1155, 301 00 Plzeň Skvrňany,
Czech Republic

CE - DECLARATION-OF-CONFORMITY
CE - KONFORMITÄTSERKLÄRUNG
CE - DECLARATION-DE-CONFORMITE
CE - CONFORMITEITSVERKLARING
CE - DECLARACION-DE-CONFORMIDAD
CE - DICHIARAZIONE-DI-CONFORMITA
CE - ΔΗΛΩΣΗ ΣΥΜΜΟΡΦΩΣΗΣ
CE - DECLARAÇÃO-DE-CONFORMIDADE
CE - ЗАЯВЛЕНИЕ-О-СООТВЕТСТВИИ
CE - OVERENSSTEMMELSESERKLÆRING
CE - FÖRSÄKRAN-OM-ÖVERENSTÄMMELSE
CE - ERKLÆRING OM-SAMSVAR
CE - ILMOITUS-YHDENMUKAISUUDESTA
CE - PROHLÁŠENÍ-O-SHODĚ
CE - IZJAVA-O-USKLAĐENOSTI
CE - MEGFELELŐSÉGI-NYILATKOZAT
CE - DEKLARACJA-ZGODNOŚCI
CE - DECLARAŢIE-DE-CONFORMITATE
CE - IZJAVA O SKLADNOSTI
CE - VASTAVUSDEKLARATSIOON
CE - ДЕКЛАРАЦИЯ-ЗА-СЪОТВЕТСТВИЕ
CE - ATITIKTIES-DEKLARACIJA
CE - ATBILSTĪBAS-DEKLARĀCIJA
CE - VYHLÁSENIE-ZHODY
CE - UYGUNLUK-BEYANI

Daikin Industries Czech Republic s.r.o.

01 (GB) declares under its sole responsibility that the air conditioning models to which this declaration relates:
02 (D) erklärt auf seine alleinige Verantwortung daß die Modelle der Klimageräte für die diese Erklärung bestimmt ist:
03 (F) déclare sous sa seule responsabilité que les appareils d'air conditionné visés par la présente déclaration:
04 (NL) verklaart hierbij op eigen exclusieve verantwoordelijkheid dat de airconditioning units waarop deze verklaring betrekking heeft:
05 (E) declara baja su única responsabilidad que los modelos de aire acondicionado a los cuales hace referencia la declaración:
06 (I) dichiara sotto sua responsabilità che i condizionatori modello a cui è riferita questa dichiarazione:
07 (GR) δηλώνει με αποκλειστική της ευθύνη ότι τα μοντέλα των κλιματιστικών συσκευών στα οποία αναφέρεται η παρούσα δήλωση:
08 (P) declara sob sua exclusiva responsabilidade que os modelos de ar condicionado a que esta declaração se refere:
09 (RUS) заявляет, исключительно под свою ответственность, что модели кондиционеров воздуха, к которым относится настоящее заявление:
10 (DK) erklærer under eneansvar, at klimaanlægmodellerne, som denne deklaration vedrører:
11 (S) deklarerar i egenskap av huvudansvarig, att luftkonditioneringsmodellerna som berörs av denna deklaration innebär att:
12 (N) erklærer et fullstendig ansvar for at de luftkondisjoneringsmodeller som berøres av denne deklarasjon, innebærer at:
13 (FIN) ilmoittaa yksinomaan omalla vastuullaan, että tämän ilmoituksen tarkoittamat ilmastointilaitteiden mallit:
14 (CZ) prohlašuje ve své plné odpovědnosti, že modely klimatizace, k nimž se toto prohlášení vztahuje:
15 (HR) izjavljuje pod isključivo vlastitom odgovornošću da su modeli klima uređaja na koje se ova izjava odnosi:
16 (H) teljes felelőssége tudatában kijelenti, hogy a klímaberendezés modellek, melyekre e nyilatkozat vonatkozik:
17 (PL) deklaruje na własną i wyłączną odpowiedzialność, że modele klimatyzatorów, których dotyczy niniejsza deklaracja:
18 (RO) declară pe proprie răspundere că aparatele de aer condiţionat la care se referă această declaraţie:
19 (SLO) z vso odgovornostjo izjavlja, da so modeli klimatskih naprav, na katere se izjava nanaša:
20 (EST) kinnitab oma täielikul vastutusel, et käesoleva deklaratsiooni alla kuuluvad kliimaseadmete mudelid:
21 (BG) декларира на своя отговорност, че моделите климатична инсталация, за които се отнася тази декларация:
22 (LT) visiška savo atsakomybe skelbia, kad oro kondicionavimo prietaisų modeliai, kuriems yra taikoma ši deklaracija:
23 (LV) ar pilnu atbildību apliecina, ka tālāk uzskaitīto modeļu gaisa kondicionētāji, uz kuriem attiecas šī deklarācija:
24 (SK) vyhlasuje na vlastnú zodpovednosť, že tieto klimatizačné modely, na ktoré sa vzťahuje toto vyhlásenie:
25 (TR) tamamen kendi sorumluluğunda olmak üzere bu bildirinin ilgili olduğu klima modellerinin aşağıdaki gibi olduğunu beyan eder:

RXF20A2V1B, RXF25A2V1B, RXF35A2V1B,

01 are in conformity with the following standard(s) or other normative document(s), provided that these are used in accordance with our instructions:
02 der/den folgenden Norm(en) oder einem anderen Normdokument oder -dokumenten entspricht/entsprechen, unter der Voraussetzung, daß sie gemäß unseren Anweisungen eingesetzt werden:
03 sont conformes à la/aux norme(s) ou autre(s) document(s) normatif(s), pour autant qu'ils soient utilisés conformément à nos instructions:
04 conform de volgende norm(en) of één of meer andere bindende documenten zijn, op voorwaarde dat ze worden gebruikt overeenkomstig onze instructies:
05 están en conformidad con la(s) siguiente(s) norma(s) u otro(s) documento(s) normativo(s), siempre que sean utilizados de acuerdo con nuestras instrucciones:
06 sono conformi al(i) seguente(i) standard(s) o altro(i) documento(i) a carattere normativo, a patto che vengano usati in conformità alle nostre istruzioni:
07 είναι σύμφωνα με το(α) ακόλουθο(α) πρότυπο(α) ή άλλο έγγραφο(α) κανονισμών, υπό την προϋπόθεση ότι χρησιμοποιούνται σύμφωνα με τις οδηγίες μας:
08 estão em conformidade com a(s) seguinte(s) norma(s) ou outro(s) documento(s) normativo(s), desde que estes sejam utilizados de acordo com as nossas instruções:
09 соответствуют следующим стандартам или другим нормативным документам, при условии их использования согласно нашим инструкциям:
10 overholder følgende standard(er) eller andet/andre retningsgivende dokument(er), forudsat at disse anvendes i henhold til vore instrukser:
11 respektive utrustning är utförd i överensstämmelse med och följer följande standard(er) eller andra normgivande dokument, under förutsättning att användning sker i överensstämmelse med våra instruktioner:
12 respektive utstyr er i overensstemmelse med følgende standard(er) eller andre normgivende dokument(er), under forutsetning av at disse brukes i henhold til våre instrukser:
13 vastaavat seuraavien standardien ja muiden ohjeellisten dokumenttien vaatimuksia edellyttäen, että niitä käytetään ohjeidemme mukaisesti:
14 za předpokladu, že jsou využívány v souladu s našimi pokyny, odpovídají následujícím normám nebo normativním dokumentům:
15 u skladu sa slijedećim standardom(ima) ili drugim normativnim dokumentom(ima), uz uvjet da se oni koriste u skladu s našim uputama:
16 megfelelnek az alábbi szabvány(ok)nak vagy egyéb irányadó dokumentum(ok)nak, ha azokat előírás szerint használják:
17 spełniają wymogi następujących norm i innych dokumentów normalizacyjnych, pod warunkiem że używane są zgodnie z naszymi instrukcjami:
18 sunt în conformitate cu următorul (următoarele) standard(e) sau alt(e) document(e) normativ(e), cu condiţia ca acestea să fie utilizate în conformitate cu instrucţiunile noastre:
19 skladni z naslednjimi standardi in drugimi normativi, pod pogojem, da se uporabljajo v skladu z našimi navodili:
20 on vastavuses järgmis(t)e standardi(te)ga või teiste normatiivsete dokumentidega, kui neid kasutatakse vastavalt meie juhenditele:
21 съответстват на следните стандарти или други нормативни документи, при условие, че се използват съгласно нашите инструкции:
22 atitinka žemiau nurodytus standartus ir (arba) kitus norminius dokumentus su sąlyga, kad yra naudojami pagal mūsų nurodymus:
23 tad, ja lietoti atbilstoši ražotāja norādījumiem, atbilst sekojošiem standartiem un citiem normatīviem dokumentiem:
24 sú v zhode s nasledovnou(ými) normou(ami) alebo iným(i) normatívnym(i) dokumentom(ami), za predpokladu, že sa používajú v súlade s naším návodom:
25 ürünün, talimatlarımıza göre kullanılması koşuluyla aşağıdaki standartlar ve norm belirten belgelerle uyumludur:

EN60335-2-40,

01 following the provisions of:
02 gemäß den Vorschriften der:
03 conformément aux stipulations des:
04 overeenkomstig de bepalingen van:
05 siguiendo las disposiciones de:
06 secondo le prescrizioni per:
07 με τήρηση των διατάξεων των:
08 de acordo com o previsto em:
09 в соответствии с положениями:
10 under iagttagelse af bestemmelserne i:
11 enligt villkoren i:
12 gitt i henhold til bestemmelsene i:
13 noudattaen määräyksiä:
14 za dodržení ustanovení předpisu:
15 prema odredbama:
16 követi a(z):
17 zgodnie z postanowieniami Dyrektyw:
18 în urma prevederilor:
19 ob upoštevanju določb:
20 vastavalt nõuetele:
21 спедвайки клаузите на:
22 laikantis nuostatų, pateikiamų:
23 ievērojot prasības, kas noteiktas:
24 održiavajúc ustanovenia:
25 bunun koşullarına uygun olarak:

Low Voltage 2014/35/EU
Electromagnetic Compatibility 2014/30/EU *
Machinery 2006/42/EC **

01 Directives, as amended.
02 Direktiven, gemäß Änderung.
03 Directives, telles que modifiées.
04 Richtlijnen, zoals geamendeerd.
05 Directivas, según lo enmendado.
06 Direttive, come da modifica.
07 Οδηγιών, όπως έχουν τροποποιηθεί.
08 Directivas, conforme alteração em.
09 Директив со всеми поправками.
10 Direktiver, med senere ændringer.
11 Direktiv, med företagna ändringar.
12 Direktiver, med foretatte endringer.
13 Direktiivejä, sellaisina kuin ne ovat muutettuina.
14 v platném znění.
15 Smjernice, kako je izmijenjeno.
16 irányelv(ek) és módosításaik rendelkezéseit.
17 z późniejszymi poprawkami.
18 Directivelor, cu amendamentele respective.
19 Direktive z vsemi spremembami.
20 Direktiivid koos muudatustega.
21 Директиви, с техните изменения.
22 Direktyvose su papildymais.
23 Direktīvās un to papildinājumos.
24 Smernice, v platnom znení.
25 Değiştirilmiş hallerıyle Yönetmelikler.

01 Note* as set out in <A> and judged positively by <B> according to the **Certificate** <C>.
02 Hinweis* wie in <A> aufgeführt und von <B> positiv beurteilt gemäß **Zertifikat** <C>.
03 Remarque* tel que défini dans <A> et évalué positivement par <B> conformément au **Certificat** <C>.
04 Bemerk* zoals vermeld in <A> en positief beoordeeld door <B> overeenkomstig **Certificaat** <C>.
05 Nota* como se establece en <A> y es valorado positivamente por <B> de acuerdo con el **Certificado** <C>.
06 Nota* delineato nel <A> e giudicato positivamente da <B> secondo il **Certificato** <C>.
07 Σημείωση* όπως καθορίζεται στο <A> και κρίνεται θετικά από το <B> σύμφωνα με το **Πιστοποιητικό** <C>.
08 Nota* tal como estabelecido em <A> e com o parecer positivo de <B> de acordo com o **Certificado** <C>.
09 Примечание* как указано в <A> и в соответствии с положительным решением <B> согласно **Свидетельству** <C>.
10 Bemærk* som anført i <A> og positivt vurderet af <B> i henhold til **Certifikat** <C>.
11 Information* enligt <A> och godkänts av <B> enligt **Certifikatet** <C>.
12 Merk* som det fremkommer i <A> og gjennom positiv bedømmelse av <B> ifølge **Sertifikat** <C>.
13 Huom* jotka on esitetty asiakirjassa <A> ja jotka <B> on hyväksynyt **Sertifikaatin** <C> mukaisesti.
14 Poznámka* jak bylo uvedeno v <A> a pozitivně zjištěno <B> v souladu s **osvědčením** <C>.
15 Napomena* kako je izloženo u <A> i pozitivno ocijenjeno od strane <B> prema **Certifikatu** <C>.
16 Megjegyzés* a(z) <A> alapján, a(z) <B> igazolta a megfelelést, a(z) <C> **tanúsítvány** szerint.
17 Uwaga* zgodnie z dokumentacją <A>, pozytywną opinią <B> i **Świadectwem** <C>.
18 Notă* aşa cum este stabilit în <A> şi apreciat pozitiv de <B> în conformitate cu **Certificatul** <C>.
19 Opomba* kot je določeno v <A> in odobreno s strani <B> v skladu s **certifikatom** <C>.
20 Märkus* nagu on näidatud dokumendis <A> ja heaks kiidetud <B> järgi vastavalt **sertifikaadile** <C>.
21 Забележка* както е изложено в <A> и оценено положително от <B> съгласно **Сертификата** <C>.
22 Pastaba* kaip nustatyta <A> ir kaip teigiamai nuspręsta <B> pagal **Sertifikatą** <C>.
23 Piezīmes* kā norādīts <A> un atbilstoši <B> pozitīvajam vērtējumam saskaņā ar **sertifikātu** <C>.
24 Poznámka* ako bolo uvedené v <A> a pozitívne zistené <B> v súlade s **osvedčením** <C>.
25 Not* <A>'da belirtildiği gibi ve <C> **Sertifikasına** göre <B> tarafından olumlu olarak değerlendirildiği gibi.

<A>	DAIKIN.TCF.032D2/12-2017
<B>	DEKRA (NB0344)
<C>	2159619.0551-EMC

01** DICz*** is authorised to compile the Technical Construction File.
02** DICz*** hat die Berechtigung die Technische Konstruktionsakte zusammenzustellen.
03** DICz*** est autorisé à compiler le Dossier de Construction Technique.
04** DICz*** is bevoegd om het Technisch Constructiedossier samen te stellen.
05** DICz*** está autorizado a compilar el Archivo de Construcción Técnica.
06** DICz*** è autorizzata a redigere il File Tecnico di Costruzione.
07** Η DICz*** είναι εξουσιοδοτημένη να συντάξει τον Τεχνικό φάκελο κατασκευής.
08** A DICz*** está autorizada a compilar a documentação técnica de fabrico.
09** Компания DICz*** уполномочена составить Комплект технической документации.
10** DICz*** er autoriseret til at udarbejde de tekniske konstruktionsdata.
11** DICz*** är bemyndigade att sammanställa den tekniska konstruktionsfilen.
12** DICz*** har tillatelse til å kompilere den Tekniske konstruksjonsfilen.
13** DICz*** on valtuutettu laatimaan Teknisen asiakirjan.
14** Společnost DICz*** má oprávnění ke kompilaci souboru technické konstrukce.
15** DICz*** je ovlašten za izradu Datoteke o tehničkoj konstrukciji.
16** A DICz*** jogosult a műszaki konstrukciós dokumentáció összeállítására.
17** DICz*** ma upoważnienie do zbierania i opracowywania dokumentacji konstrukcyjnej.
18** DICz*** este autorizat să compileze Dosarul tehnic de construcţie.
19** DICz*** je pooblaščen za sestavo datoteke s tehnično mapo.
20** DICz*** on volitatud koostama tehnilist dokumentatsiooni.
21** DICz*** е оторизирана да състави Акта за техническа конструкция.
22** DICz*** yra įgaliota sudaryti šį techninės konstrukcijos failą.
23** DICz*** ir autorizēts sastādīt tehnisko dokumentāciju.
24** Spoločnosť DICz*** je oprávnená vytvoriť súbor technickej konštrukcie.
25** DICz*** Teknik Yapı Dosyasını derlemeye yetkilidir.

***DICz = Daikin Industries Czech Republic s.r.o.

3P511700-5A

DAIKIN

Tetsuya Baba
Managing Director
Pilsen, 1st of December 2017

DAIKIN INDUSTRIES CZECH REPUBLIC s.r.o.
U Nové Hospody 1/1155, 301 00 Plzeň Skvrňany,
Czech Republic

Table of Contents

1 About the documentation 4
1.1 About this document 4
2 About the box 4
2.1 Outdoor unit 4
2.1.1 To unpack the outdoor unit 4
2.1.2 To remove the accessories from the outdoor unit 5
3 Preparation 5
3.1 Preparing the installation site 5
3.1.1 Installation site requirements of the outdoor unit 5
3.1.2 Additional installation site requirements of the outdoor unit in cold climates 6
3.2 Preparing refrigerant piping 6
3.2.1 Refrigerant piping requirements 6
3.2.2 Refrigerant piping length and height difference 6
3.2.3 Refrigerant piping insulation 6
4 Installation 6
4.1 Opening the units 6
4.1.1 To open the outdoor unit 6
4.2 Mounting the outdoor unit 7
4.2.1 To provide the installation structure 7
4.2.2 To install the outdoor unit 8
4.2.3 To provide drainage 8
4.2.4 To prevent the outdoor unit from falling over 8
4.3 Connecting the refrigerant piping 8
4.3.1 About connecting the refrigerant piping 8
4.3.2 Precautions when connecting the refrigerant piping 8
4.3.3 To connect the refrigerant piping to the outdoor unit 8
4.4 Checking the refrigerant piping 9
4.4.1 To check for leaks 9
4.4.2 To perform vacuum drying 9
4.5 Charging refrigerant 9
4.5.1 About charging refrigerant 9
4.5.2 About the refrigerant 9
4.5.3 To determine the additional refrigerant amount 10
4.5.4 To determine the complete recharge amount 10
4.5.5 To charge additional refrigerant 10
4.5.6 To fix the fluorinated greenhouse gases label 10
4.6 Connecting the electrical wiring 10
4.6.1 Guidelines when connecting the electrical wiring 11
4.6.2 Specifications of standard wiring components 11
4.6.3 To connect the electrical wiring on the outdoor unit 11
4.7 Finishing the outdoor unit installation 11
4.7.1 To finish the outdoor unit installation 11
4.7.2 To close the outdoor unit 11
5 Commissioning 11
5.1 Checklist before commissioning 11
5.2 Checklist during commissioning 12
5.3 To perform a test run 12
5.4 Starting up the outdoor unit 12
6 Disposal 12
6.1 Overview: Disposal 12
6.2 To pump down 12
6.3 To start and stop forced cooling 12
7 Technical data 13
7.1 Wiring diagram 13

1 About the documentation

1.1 About this document

INFORMATION

Make sure that the user has the printed documentation and ask him/her to keep it for future reference.

Target audience

Authorised installers

Documentation set

This document is part of a documentation set. The complete set consists of:

- **General safety precautions:**
  - Safety instructions that you MUST read before installing
  - Format: Paper (in the box of the outdoor unit)
- **Outdoor unit installation manual:**
  - Installation instructions
  - Format: Paper (in the box of the outdoor unit)
- **Installer reference guide:**
  - Preparation of the installation, reference data,…
  - Format: Digital files on http://www.daikineurope.com/support-and-manuals/product-information/

Latest revisions of the supplied documentation may be available on the regional Daikin website or via your dealer.

The original documentation is written in English. All other languages are translations.

Technical engineering data

- A **subset** of the latest technical data is available on the regional Daikin website (publicly accessible).
- The **full set** of latest technical data is available on the Daikin extranet (authentication required).

2 About the box

2.1 Outdoor unit

2.1.1 To unpack the outdoor unit

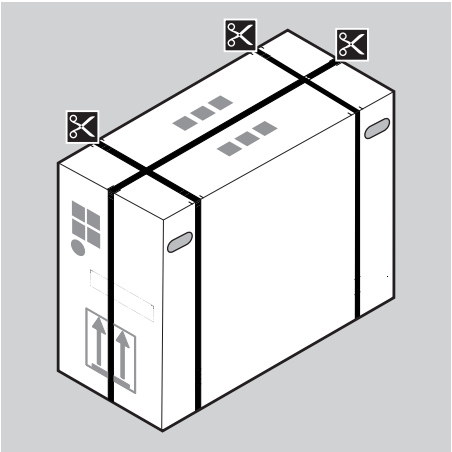

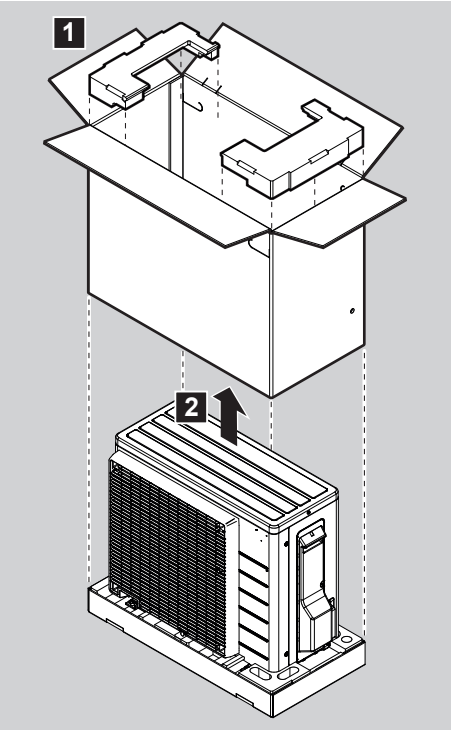

2.1.2 To remove the accessories from the outdoor unit

1 Lift the outdoor unit.

CAUTION

Only handle the outdoor unit as follows:

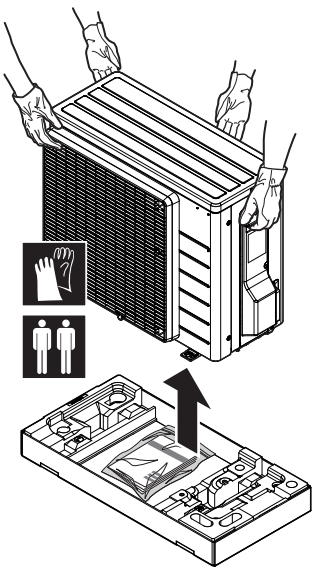

2 Remove the accessories at the bottom of the package.

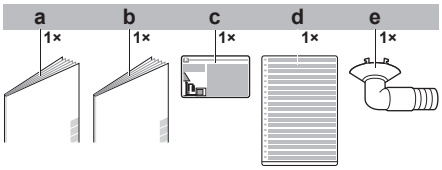

a General safety precautions
b Outdoor unit installation manual
c Fluorinated greenhouse gases label
d Multilingual fluorinated greenhouse gases label
e Drain plug (located on the bottom of the packing case)

3 Preparation

3.1 Preparing the installation site

CAUTION

- Check if the installation location can support the unit's weight. Poor installation is hazardous. It can also cause vibrations or unusual operating noise.
- Provide sufficient service space.
- Do NOT install the unit so that it is in contact with a ceiling or a wall, as this may cause vibrations.

- Choose the installation location with sufficient place for carrying the unit in and out of the site.
- Choose a location where the hot/cold air discharged from the unit or the operation noise, will NOT disturb anyone.
- Provide sufficient space around the unit for servicing and air circulation.
- Avoid areas where flammable gas or product might leak.

Install power cables at least 1 metre away from televisions or radios to prevent interference. Depending on the radio waves, a distance of 3 metres may NOT be sufficient.

WARNING

Do NOT place objects below the indoor and/or outdoor unit that may get wet. In this condition, condensation on the main unit or refrigerant pipes, air filter dirt or drain blockage may cause dripping. This results in fouling or failure of the object which is located beneath the unit.

WARNING

The appliance shall be stored in a room without continuously operating ignition sources (example: open flames, an operating gas appliance or an operating electric heater).

3.1.1 Installation site requirements of the outdoor unit

Mind the following spacing guidelines:

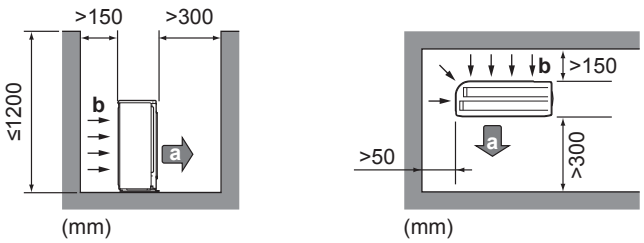

a Air outlet
b Air inlet

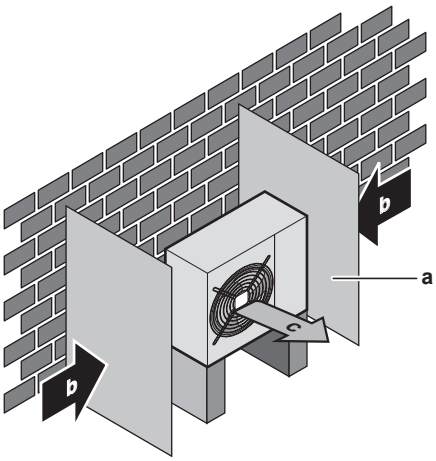

a Baffle plate
b Prevailing wind direction
c Air outlet

The outdoor unit is designed for outdoor installation only, and for ambient temperatures ranging from –10 to 46°C in cooling mode and from –15 to 24°C in heating mode.

3.1.2 Additional installation site requirements of the outdoor unit in cold climates

Protect the outdoor unit against direct snowfall and take care that the outdoor unit is NEVER snowed up.

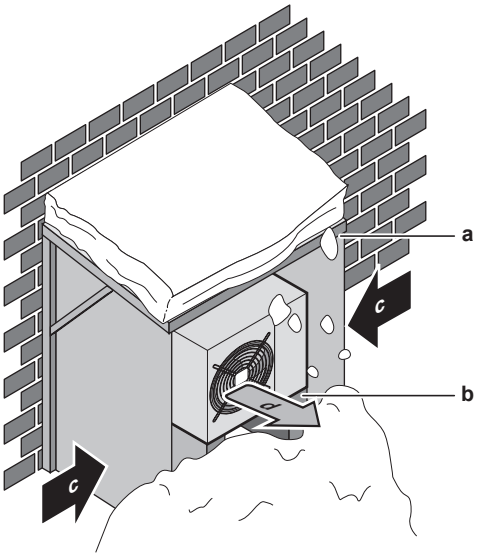

a Snow cover or shed
b Pedestal
c Prevailing wind direction
d Air outlet

In any case, provide at least 300 mm of free space below the unit. Additionally, make sure the unit is positioned at least 100 mm above the maximum expected level of snow. See "4.2 Mounting the outdoor unit" on page 7 for more details.

In heavy snowfall areas it is very important to select an installation site where the snow will NOT affect the unit. If lateral snowfall is possible, make sure that the heat exchanger coil is NOT affected by the snow. If necessary, install a snow cover or shed and a pedestal.

3.2 Preparing refrigerant piping

3.2.1 Refrigerant piping requirements

- **Piping material:** Phosphoric acid deoxidised seamless copper.
- **Piping diameter:**

Liquid piping	Ø6.4 mm (1/4")
Gas piping	Ø9.5 mm (3/8")

- **Piping temper grade and thickness:**

Outer diameter (Ø)	Temper grade	Thickness (t)[(a)]	
6.4 mm (1/4")	Annealed (O)	≥0.8 mm	
9.5 mm (3/8")	Annealed (O)		

(a) Depending on the applicable legislation and the unit's maximum working pressure (see "PS High" on the unit name plate), larger piping thickness might be required.

3.2.2 Refrigerant piping length and height difference

What?	Distance
Maximum allowable pipe length	15 m
Minimum allowable pipe length	1.5 m
Maximum allowable height distance	12 m

3.2.3 Refrigerant piping insulation

Pipe outer diameter ($Ø_p$)	Insulation inner diameter ($Ø_i$)	Insulation thickness (t)
6.4 mm (1/4")	8~10 mm	≥10 mm
9.5 mm (3/8")	12~15 mm	

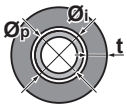

If the temperature is higher than 30°C and the humidity is higher than RH 80%, the thickness of the insulation materials should be at least 20 mm to prevent condensation on the surface of the insulation.

4 Installation

4.1 Opening the units

4.1.1 To open the outdoor unit

DANGER: RISK OF ELECTROCUTION

DANGER: RISK OF BURNING

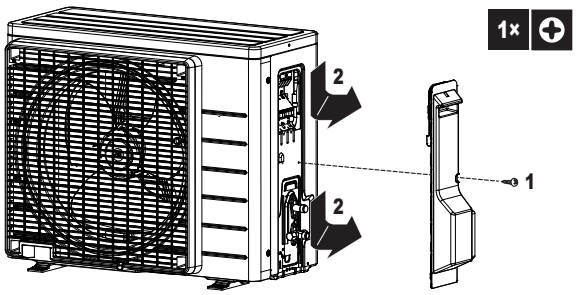

4.2 Mounting the outdoor unit

4.2.1 To provide the installation structure

Prepare 4 sets of M8 or M10 anchor bolts, nuts and washers (field supply).

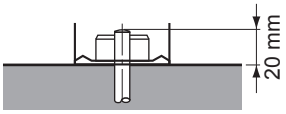

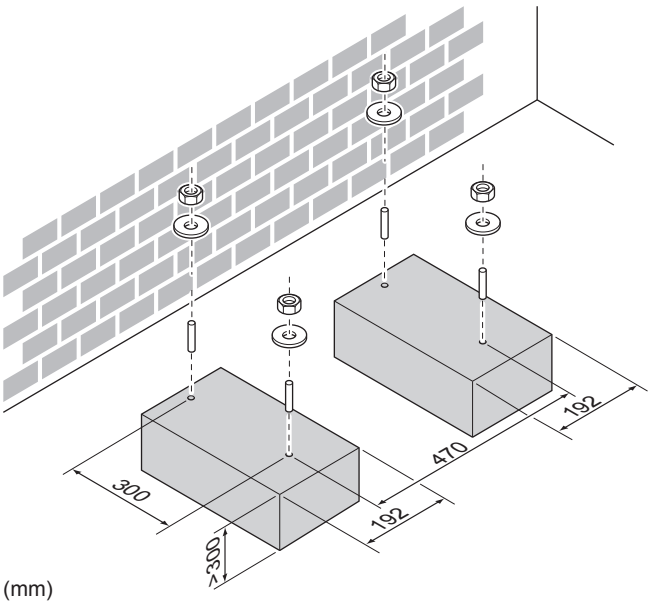

(mm)

In any case, provide at least 300 mm of free space below the unit. Additionally, make sure the unit is positioned at least 100 mm above the maximum expected level of snow. In this case, it is recommended to construct a pedestal.

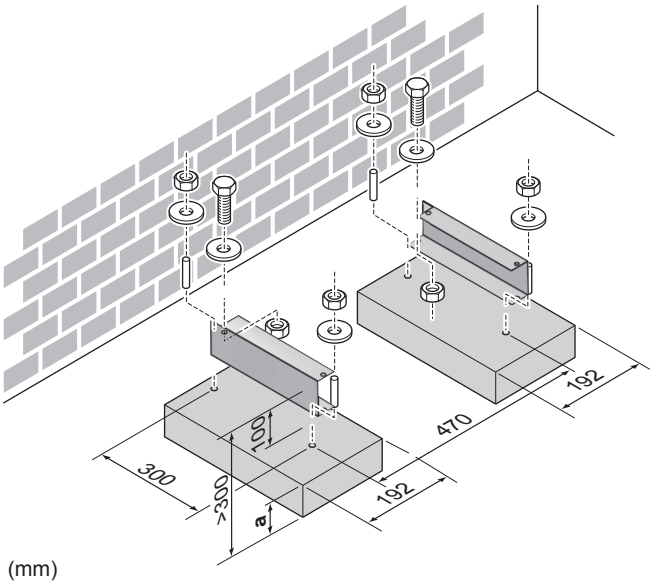

(mm)

a Maximum snowfall height

If the unit is installed on brackets to the wall, install the unit as follows:

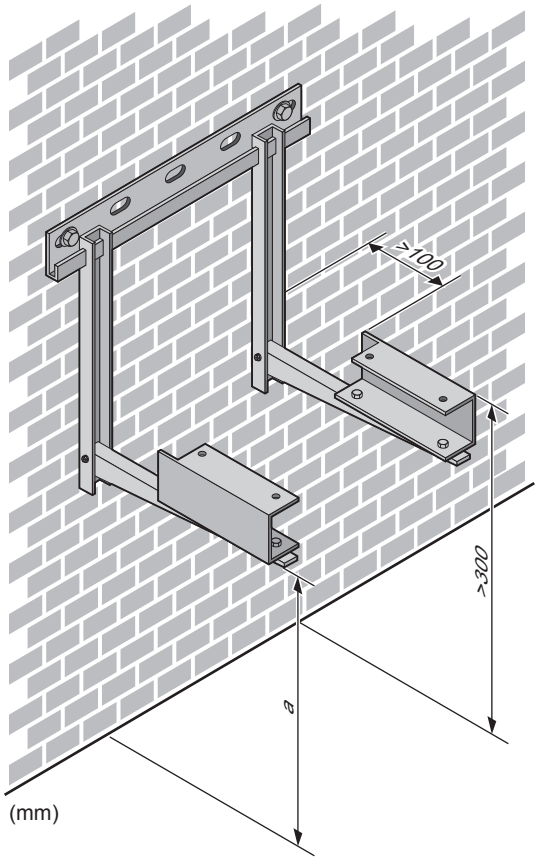

(mm)

a Maximum snowfall height

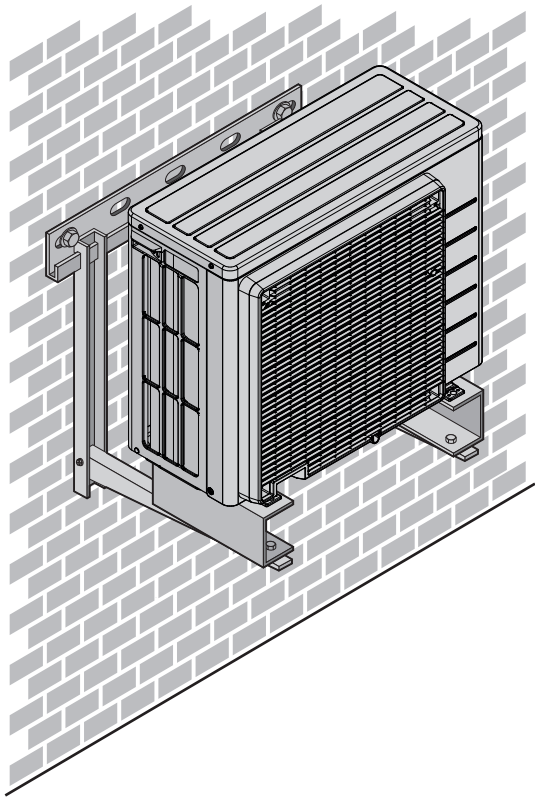

4.2.2 To install the outdoor unit

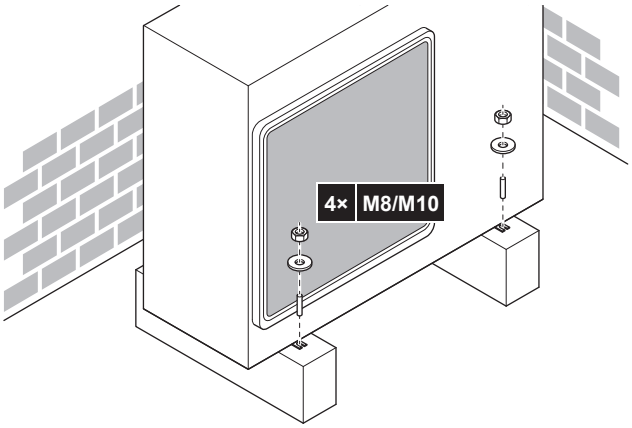

4.2.3 To provide drainage

NOTICE

If the unit is installed in a cold climate, take adequate measures so that the evacuated condensate CANNOT freeze.

INFORMATION

For information on the available options, contact your dealer.

NOTICE

Provide at least 300 mm of free space below the unit. Additionally, make sure the unit is positioned at least 100 mm above the expected level of snow.

1 Use a drain plug for drainage.
2 Use a Ø16 mm hose (field supply).

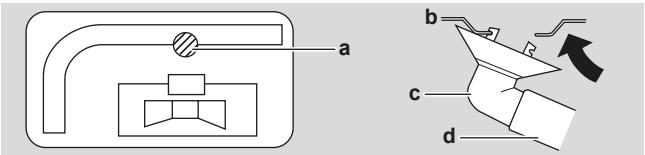

a Drain port
b Bottom frame
c Drain plug
d Hose (field supply)

4.2.4 To prevent the outdoor unit from falling over

In case the unit is installed in places where strong wind can tilt the unit, take following measure:

1 Prepare 2 cables as indicated in the following illustration (field supply).
2 Place the 2 cables over the outdoor unit.
3 Insert a rubber sheet between the cables and the outdoor unit to prevent the cable from scratching the paint (field supply).
4 Attach the cable's ends. Tighten those ends.

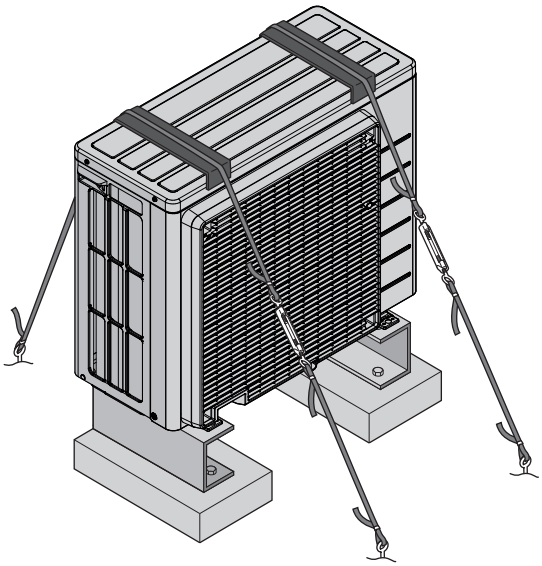

4.3 Connecting the refrigerant piping

DANGER: RISK OF BURNING

4.3.1 About connecting the refrigerant piping

Before connecting the refrigerant piping

Make sure the outdoor and indoor unit are mounted.

Typical workflow

Connecting the refrigerant piping involves:

- Connecting the refrigerant piping to the indoor unit
- Connecting the refrigerant piping to the outdoor unit
- Insulating the refrigerant piping
- Keeping in mind the guidelines for:
  - Pipe bending
  - Flaring pipe ends
  - Using the stop valves

4.3.2 Precautions when connecting the refrigerant piping

DANGER: RISK OF BURNING

CAUTION

- Use the flare nut fixed to the main unit.
- To prevent gas leakage, apply refrigeration oil only to the inside of the flare. Use refrigeration oil for R32.
- Do NOT reuse joints.

WARNING

Connect the refrigerant piping securely before running the compressor. If the refrigerant piping is NOT connected and the stop valve is open when the compressor is run, air will be sucked in. This will cause abnormal pressure in the refrigeration cycle, which may result in equipment damage and even injury.

4.3.3 To connect the refrigerant piping to the outdoor unit

- **Piping length.** Keep field piping as short as possible.

- **Piping protection.** Protect the field piping against physical damage.

1 Connect the liquid refrigerant connection from the indoor unit to the liquid stop valve of the outdoor unit.

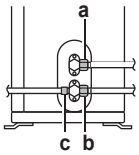

a Liquid stop valve
b Gas stop valve
c Service port

2 Connect the gas refrigerant connection from the indoor unit to the gas stop valve of the outdoor unit.

NOTICE

It is recommended that the refrigerant piping between indoor and outdoor unit is installed in a ducting or the refrigerant piping is wrapped with finishing tape.

4.4 Checking the refrigerant piping

4.4.1 To check for leaks

NOTICE

Do NOT exceed the unit's maximum working pressure (see "PS High" on the unit name plate).

NOTICE

Make sure to use a recommended bubble test solution from your wholesaler. Do not use soap water, which may cause cracking of flare nuts (soap water may contain salt, which absorbs moisture that will freeze when the piping gets cold), and/or lead to corrosion of flared joints (soap water may contain ammonia which causes a corrosive effect between the brass flare nut and the copper flare).

1 Charge the system with nitrogen gas up to a gauge pressure of at least 200 kPa (2 bar). It is recommended to pressurize to 3000 kPa (30 bar) in order to detect small leaks.

2 Check for leaks by applying the bubble test solution to all connections.

3 Discharge all nitrogen gas.

4.4.2 To perform vacuum drying

1 Vacuum the system until the pressure on the manifold indicates −0.1 MPa (−1 bar).

2 Leave as is for 4-5 minutes and check the pressure:

If the pressure…	Then…
Does not change	There is no moisture in the system. This procedure is finished.
Increases	There is moisture in the system. Go to the next step.

3 Vacuum the system for at least 2 hours to a manifold pressure of −0.1 MPa (−1 bar).

4 After turning the pump OFF, check the pressure for at least 1 hour.

5 If you do NOT reach the target vacuum or CANNOT maintain the vacuum for 1 hour, do the following:

- Check for leaks again.
- Perform vacuum drying again.

NOTICE

Make sure to open the stop valves after installing the refrigerant piping and performing vacuum drying. Running the system with the stop valves closed may break the compressor.

4.5 Charging refrigerant

4.5.1 About charging refrigerant

The outdoor unit is factory charged with refrigerant, but in some cases the following might be necessary:

What	When
Charging additional refrigerant	When the total liquid piping length is more than specified (see later).
Completely recharging refrigerant	**Example:** ▪ When relocating the system. ▪ After a leak.

Charging additional refrigerant

Before charging additional refrigerant, make sure the outdoor unit's **external** refrigerant piping is checked (leak test, vacuum drying).

INFORMATION

Depending on the units and/or the installation conditions, it might be necessary to connect electrical wiring before you can charge refrigerant.

Typical workflow – Charging additional refrigerant typically consists of the following stages:

1 Determining if and how much you have to charge additionally.

2 If necessary, charging additional refrigerant.

3 Filling in the fluorinated greenhouse gases label, and fixing it to the inside of the outdoor unit.

Completely recharging refrigerant

Before completely recharging refrigerant, make sure the following is done:

1 All refrigerant is recovered from the system.

2 The outdoor unit's **external** refrigerant piping is checked (leak test, vacuum drying).

3 Vacuum drying on the outdoor unit's **internal** refrigerant piping is performed.

NOTICE

Before completely recharging, perform vacuum drying on the outdoor unit's **internal** refrigerant piping as well.

Typical workflow – Completely recharging refrigerant typically consists of the following stages:

1 Determining how much refrigerant to charge.

2 Charging refrigerant.

3 Filling in the fluorinated greenhouse gases label, and fixing it to the inside of the outdoor unit.

4.5.2 About the refrigerant

This product contains fluorinated greenhouse gases. Do NOT vent gases into the atmosphere.

Refrigerant type: R32

Global warming potential (GWP) value: 675

NOTICE

In Europe, the **greenhouse gas emissions** of the total refrigerant charge in the system (expressed as tonnes CO_2-equivalent) is used to determine the maintenance intervals. Follow the applicable legislation.

Formula to calculate the greenhouse gas emissions: GWP value of the refrigerant × Total refrigerant charge [in kg] / 1000

Please contact your installer for more information.

WARNING: FLAMMABLE MATERIAL

The refrigerant inside this unit is mildly flammable.

WARNING

The appliance shall be stored in a room without continuously operating ignition sources (example: open flames, an operating gas appliance or an operating electric heater).

WARNING

- Do NOT pierce or burn refrigerant cycle parts.
- Do NOT use cleaning materials or means to accelerate the defrosting process other than those recommended by the manufacturer.
- Be aware that the refrigerant inside the system is odourless.

WARNING

The refrigerant inside the unit is mildly flammable, but normally does NOT leak. If the refrigerant leaks in the room and comes in contact with fire from a burner, a heater, or a cooker, this may result in fire, or the formation of a harmful gas.

Turn off any combustible heating devices, ventilate the room, and contact the dealer where you purchased the unit.

Do NOT use the unit until a service person confirms that the part from which the refrigerant leaked has been repaired.

4.5.3 To determine the additional refrigerant amount

If the total liquid piping length is…	Then…
≤10 m	Do NOT add additional refrigerant.
>10 m	R=(total length (m) of liquid piping–10 m)×0.020 R=Additional charge (kg)(rounded in units of 0.1 kg)

INFORMATION

Piping length is the one way length of liquid piping.

4.5.4 To determine the complete recharge amount

INFORMATION

If a complete recharge is necessary, the total refrigerant charge is: the factory refrigerant charge (see unit name plate) + the determined additional amount.

4.5.5 To charge additional refrigerant

WARNING

- Only use R32 as refrigerant. Other substances may cause explosions and accidents.
- R32 contains fluorinated greenhouse gases. Its global warming potential (GWP) value is 675. Do NOT vent these gases into the atmosphere.
- When charging refrigerant, ALWAYS use protective gloves and safety glasses.

Prerequisite: Before charging refrigerant, make sure the refrigerant piping is connected and checked (leak test and vacuum drying).

1. Connect the refrigerant cylinder to both the service port of the gas stop valve and the service port of the liquid stop valve.
2. Charge the additional refrigerant amount.
3. Open the stop valves.

4.5.6 To fix the fluorinated greenhouse gases label

1. Fill in the label as follows:

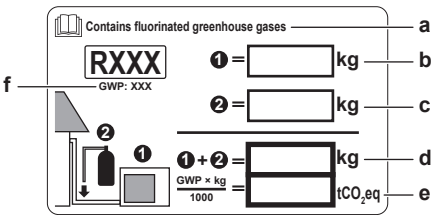

- **a** If a multilingual fluorinated greenhouse gases label is delivered with the unit (see accessories), peel off the applicable language and stick it on top of **a**.
- **b** Factory refrigerant charge: see unit name plate
- **c** Additional refrigerant amount charged
- **d** Total refrigerant charge
- **e** **Greenhouse gas emissions** of the total refrigerant charge expressed as tonnes CO_2-equivalent
- **f** GWP = Global warming potential

NOTICE

In Europe, the **greenhouse gas emissions** of the total refrigerant charge in the system (expressed as tonnes CO_2-equivalent) is used to determine the maintenance intervals. Follow the applicable legislation.

Formula to calculate the greenhouse gas emissions: GWP value of the refrigerant × Total refrigerant charge [in kg] / 1000

2. Fix the label on the inside of the outdoor unit near the gas and liquid stop valves.

4.6 Connecting the electrical wiring

DANGER: RISK OF ELECTROCUTION

WARNING

ALWAYS use multicore cable for power supply cables.

WARNING

If the supply cord is damaged, it MUST be replaced by the manufacturer, its service agent or similarly qualified persons in order to avoid a hazard.

WARNING

Do NOT connect the power supply to the indoor unit. This could result in electrical shock or fire.

WARNING

- Do NOT use locally purchased electrical parts inside the product.
- Do NOT branch the power supply for the drain pump, etc. from the terminal block. This could result in electrical shock or fire.

WARNING

Keep the interconnection wiring away from copper pipes without thermal insulation as such pipes will be very hot.

4.6.1 Guidelines when connecting the electrical wiring

- If single-core wires are used, be sure to curl the end of the lead. Improper work may cause heat or fire.
- The earth wire between the pull relief and the terminal must be longer than the other wires.

4.6.2 Specifications of standard wiring components

Component		
Power supply cable	Voltage	220~240 V
	Phase	1~
	Frequency	50 Hz
	Wire sizes	MUST comply with applicable legislation
Interconnection cable (indoor↔outdoor)		4-core cable ≥1.5 mm² and applicable for 220~240 V
Recommended field fuse		16 A
Earth leakage circuit breaker		MUST comply with applicable legislation

4.6.3 To connect the electrical wiring on the outdoor unit

1 Remove the service cover. See "4.1.1 To open the outdoor unit" on page 6.

2 Open the wire clamp.

3 Connect the interconnection cable and power supply as follows:

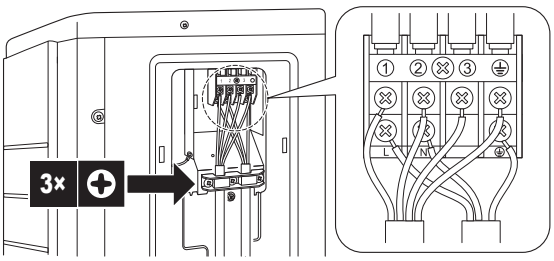

4 Tighten the terminal screws securely. We recommend using a Phillips screwdriver.

5 Install the switch box cover.

6 Install the service cover.

4.7 Finishing the outdoor unit installation

4.7.1 To finish the outdoor unit installation

1 Insulate and fix the refrigerant piping and interconnection cable as follows:

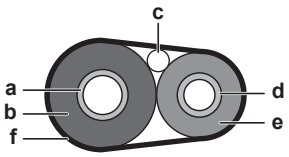

a Gas pipe
b Gas pipe insulation
c Interconnection cable
d Liquid pipe
e Liquid pipe insulation
f Finishing tape

2 Install the service cover.

4.7.2 To close the outdoor unit

NOTICE

When closing the outdoor unit cover, make sure that the tightening torque does NOT exceed 4.1 N•m.

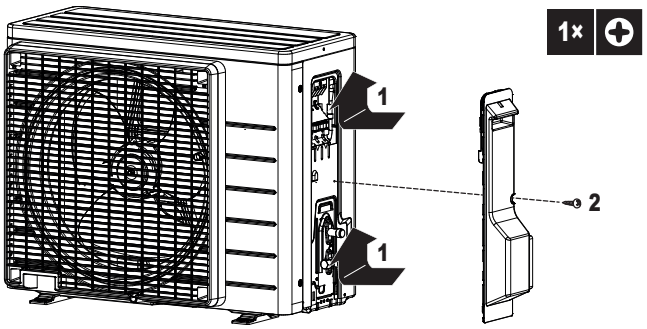

5 Commissioning

NOTICE

NEVER operate the unit without thermistors and/or pressure sensors/switches. Burning of the compressor might result.

5.1 Checklist before commissioning

Do NOT operate the system before the following checks are OK:

☐	The **indoor unit** is properly mounted.
☐	The **outdoor unit** is properly mounted.
☐	The system is properly **earthed** and the earth terminals are tightened.
☐	The **fuses** or locally installed protection devices are installed according to this document, and have NOT been bypassed.
☐	The **power supply voltage** matches the voltage on the identification label of the unit.
☐	There are NO **loose connections** or damaged electrical components in the switch box.
☐	There are NO **damaged components** or **squeezed pipes** on the inside of the indoor and outdoor units.
☐	There are NO **refrigerant leaks**.
☐	The **refrigerant pipes** (gas and liquid) are thermally insulated.
☐	The correct pipe size is installed and the **pipes** are properly insulated.
☐	The **stop valves** (gas and liquid) on the outdoor unit are fully open.

☐	The following **field wiring** has been carried out according to this document and the applicable legislation between the outdoor unit and the indoor unit.
☐	**Drainage** Make sure drainage flows smoothly. **Possible consequence:** Condensate water might drip.
☐	The indoor unit receives the signals of the **user interface**.
☐	The specified wires are used for the **interconnection cable**.

5.2 Checklist during commissioning

☐	To perform an **air purge**.
☐	To perform a **test run**.

5.3 To perform a test run

Prerequisite: Power supply MUST be in the specified range.

Prerequisite: Test run may be performed done in cooling or heating mode.

Prerequisite: Test run should be performed in accordance with the operation manual of the indoor unit to make sure that all functions and parts are working properly.

1 In cooling mode, select the lowest programmable temperature. In heating mode, select the highest programmable temperature. Test run can be disabled if necessary.

2 When the test run is finished, set the temperature to a normal level. In cooling mode: 26~28°C, in heating mode: 20~24°C.

3 The system stops operating 3 minutes after turning the unit OFF.

INFORMATION

- Even if the unit is turned OFF, it consumes electricity.
- When the power turns back on after a power break, the previously selected mode will be resumed.

5.4 Starting up the outdoor unit

See the indoor unit installation manual for configuration and commissioning of the system.

6 Disposal

NOTICE

Do NOT try to dismantle the system yourself: the dismantling of the system, treatment of the refrigerant, oil and other parts MUST comply with applicable legislation. Units MUST be treated at a specialised treatment facility for reuse, recycling and recovery.

6.1 Overview: Disposal

Typical workflow

Disposing of the system typically consists of the following stages:

1 Pumping down the system.

2 Bringing the system to a specialized treatment facility.

INFORMATION

For more details, see the service manual.

6.2 To pump down

DANGER: RISK OF EXPLOSION

Pump down – Refrigerant leakage. If you want to pump down the system, and there is a leakage in the refrigerant circuit:

- Do NOT use the unit's automatic pump down function, with which you can collect all refrigerant from the system into the outdoor unit. **Possible consequence:** Self-combustion and explosion of the compressor because of air going into the operating compressor.
- Use a separate recovery system so that the unit's compressor does NOT have to operate.

NOTICE

During pump down operation, stop the compressor before removing the refrigerant piping. If the compressor is still running and the stop valve is open during pump down, air will be sucked into the system. Compressor breakdown or damage to the system can result due to abnormal pressure in the refrigerant cycle.

Pump down operation will extract all refrigerant from the system into the outdoor unit.

1 Remove the valve lid from the liquid stop valve and the gas stop valve.

2 Carry out the forced cooling operation. See "6.3 To start and stop forced cooling" on page 12.

3 After 5 to 10 minutes (after only 1 or 2 minutes in case of very low ambient temperatures (<−10°C)), close the liquid stop valve with a hexagonal wrench.

4 Check on the manifold if the vacuum is reached.

5 After 2-3 minutes, close the gas stop valve and stop forced cooling operation.

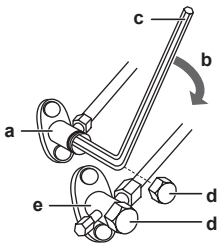

a Gas stop valve
b Closing direction
c Hexagonal wrench
d Valve lid
e Liquid stop valve

6.3 To start and stop forced cooling

There are 2 methods to perform forced cooling operation:

- using the indoor unit ON/OFF switch (if present on the indoor unit).
- using the indoor unit user interface.

Method 1: Using the indoor unit ON/OFF switch

1 Press the ON/OFF switch for at least 5 seconds.

Result: Operation will start.

Result: Forced cooling stops automatically after 15 minutes.

2 To stop operation, press the ON/OFF switch.

Method 2: Using the indoor unit user interface

3 Set the operation mode to **cooling**.

For the procedure, refer to the chapter "To perform a test run" in the installation manual of the indoor unit.

7 Technical data

A **subset** of the latest technical data is available on the regional Daikin website (publicly accessible). The **full set** of latest technical data is available on the Daikin extranet (authentication required).

7.1 Wiring diagram

Unified Wiring Diagram Legend

For applied parts and numbering refer to the wiring diagram sticker supplied on the unit. Part numbering is realized by Arabic numbers in ascending order for each part and is represented in the overview below by symbol "*" in the part code.

:	CIRCUIT BREAKER	:	PROTECTIVE EARTH
:	CONNECTION	:	PROTECTIVE EARTH (SCREW)
:	CONNECTOR	:	RECTIFIER
:	EARTH	:	RELAY CONNECTOR
:	FIELD WIRING	:	SHORT CIRCUIT CONNECTOR
:	FUSE	:	TERMINAL
:	INDOOR UNIT (INDOOR)	:	TERMINAL STRIP
:	OUTDOOR UNIT (OUTDOOR)	:	WIRE CLAMP

BLK	:	BLACK	GRN	:	GREEN	PNK	:	PINK	WHT	:	WHITE
BLU	:	BLUE	GRY	:	GREY	PRP, PPL	:	PURPLE	YLW	:	YELLOW
BRN	:	BROWN	ORG	:	ORANGE	RED	:	RED			

A*P	:	PRINTED CIRCUIT BOARD	PS	:	SWITCHING POWER SUPPLY
BS*	:	PUSH BUTTON ON / OFF, OPERATION SWITCH	PTC*	:	THERMISTOR PTC
BZ, H*O	:	BUZZER	Q*	:	INSULATED GATE BIPOLAR TRANSISTOR (IGBT)
C*	:	CAPACITOR	Q*DI	:	EARTH LEAK CIRCUIT BREAKER
AC*, CN*, E*, HA*, HE, HL*, HN*, HR*, MR*_A, MR*_B, S*, U, V, W, X*A, K*R_*	:	CONNECTION, CONNECTOR	Q*L	:	OVERLOAD PROTECTOR
D*, V*D	:	DIODE	Q*M	:	THERMO SWITCH
DB*	:	DIODE BRIDGE	R*	:	RESISTOR
DS*	:	DIP SWITCH	R*T	:	THERMISTOR
E*H	:	HEATER	RC	:	RECEIVER
F*U, FU* (FOR CHARACTERISTICS REFER TO PCB INSIDE YOUR UNIT)	:	FUSE	S*C	:	LIMIT SWITCH
FG*	:	CONNECTOR (FRAME GROUND)	S*L	:	FLOAT SWITCH
H*	:	HARNESS	S*NPH	:	PRESSURE SENSOR (HIGH)
H*P, LED*, V*L	:	PILOT LAMP, LIGHT EMITTING DIODE	S*NPL	:	PRESSURE SENSOR (LOW)
HAP	:	LIGHT EMITTING DIODE (SERVICE MONITOR GREEN)	S*PH, HPS*	:	PRESSURE SWITCH (HIGH)
HIGH VOLTAGE	:	HIGH VOLTAGE	S*PL	:	PRESSURE SWITCH (LOW)
IES	:	INTELLIGENT EYE SENSOR	S*T	:	THERMOSTAT
IPM*	:	INTELLIGENT POWER MODULE	S*W, SW*	:	OPERATION SWITCH
K*R, KCR, KFR, KHuR, K*M	:	MAGNETIC RELAY	SA*, F1S	:	SURGE ARRESTOR
L	:	LIVE	SR*, WLU	:	SIGNAL RECEIVER
L*	:	COIL	SS*	:	SELECTOR SWITCH
L*R	:	REACTOR	SHEET METAL	:	TERMINAL STRIP FIXED PLATE
M*	:	STEPPER MOTOR	T*R	:	TRANSFORMER
M*C	:	COMPRESSOR MOTOR	TC, TRC	:	TRANSMITTER
M*F	:	FAN MOTOR	V*, R*V	:	VARISTOR
M*P	:	DRAIN PUMP MOTOR	V*R	:	DIODE BRIDGE
M*S	:	SWING MOTOR	WRC	:	WIRELESS REMOTE CONTROLLER
MR*, MRCW*, MRM*, MRN*	:	MAGNETIC RELAY	X*	:	TERMINAL
N	:	NEUTRAL	X*M	:	TERMINAL STRIP (BLOCK)
n = *, N=*	:	NUMBER OF PASSES THROUGH FERRITE CORE	Y*E	:	ELECTRONIC EXPANSION VALVE COIL
PAM	:	PULSE-AMPLITUDE MODULATION	Y*R, Y*S	:	REVERSING SOLENOID VALVE COIL
PCB*	:	PRINTED CIRCUIT BOARD	Z*C	:	FERRITE CORE
PM*	:	POWER MODULE	ZF, Z*F	:	NOISE FILTER

Copyright 2017 Daikin

DAIKIN INDUSTRIES CZECH REPUBLIC s.r.o.
U Nové Hospody 1/1155, 301 00 Plzeň Skvrňany, Czech Republic

DAIKIN EUROPE N.V.
Zandvoordestraat 300, B-8400 Oostende, Belgium

3P512025-2 2017.11